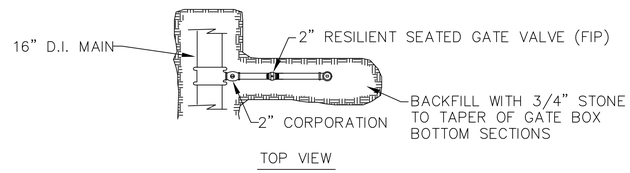

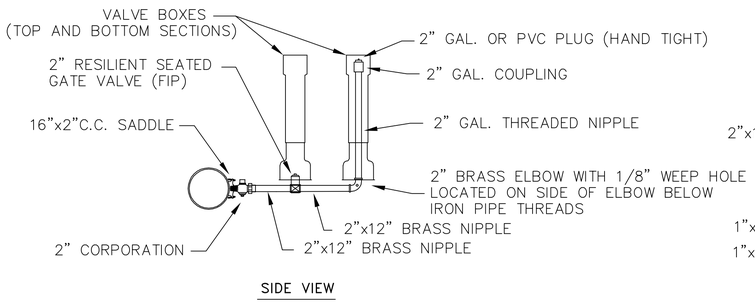

SIDE-ARM BLOW-OFF 4" & LARGER MAINS

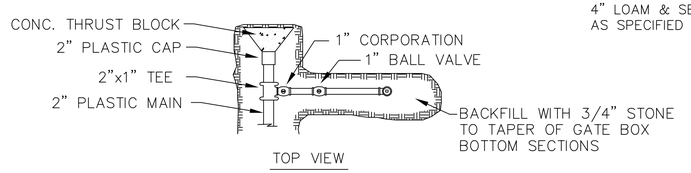

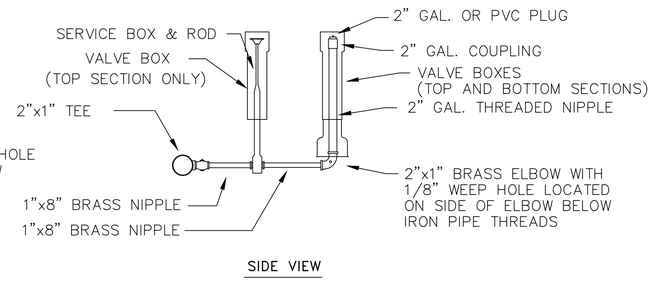

SIDE-ARM BLOW-OFF 2" MAIN

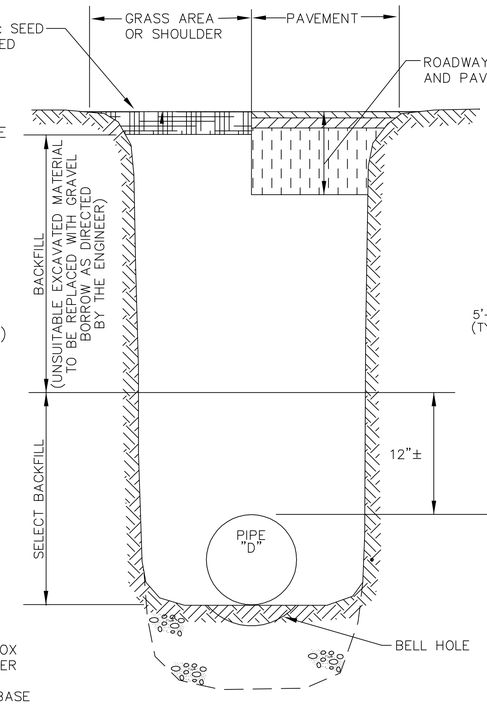

SECTION THRU EARTH TRENCH

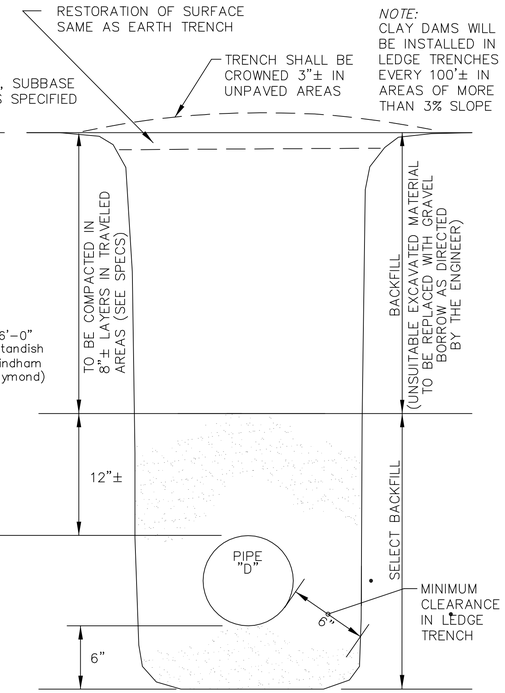

NOTE: CLAY DAMS WILL BE INSTALLED IN LEDGE TRENCHES EVERY 100'± IN AREAS OF MORE THAN 3% SLOPE

SECTION THRU LEDGE TRENCH

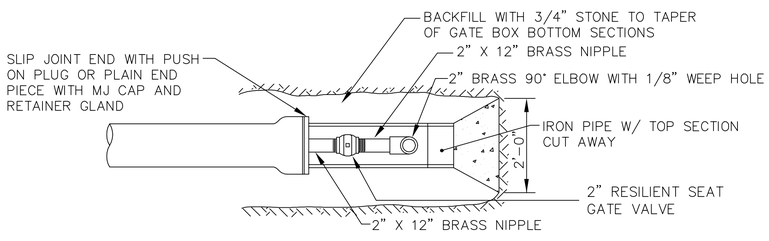

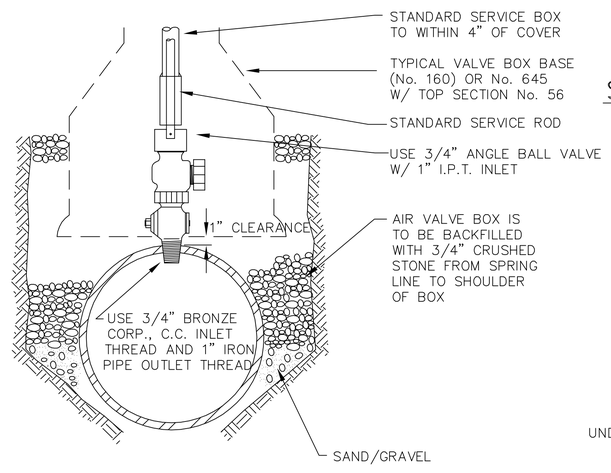

TYPICAL AIR VALVE (1")

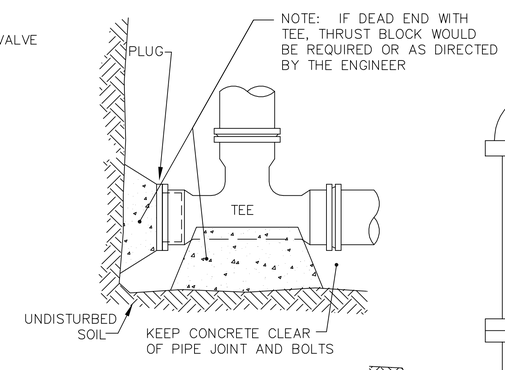

STANDARD TEE BLOCKING

FOR STATE ROADS

SETBACK SHALL CONFORM TO M.D.O.T. POLICY FOR ABOVE GROUND UTILITY LOCATIONS. FOR SPEED LIMITS >35MPH 6 1/2' FROM EDGE OF SHOULDER OR FACE OF CURB. FOR SPEED LIMITS <35MPH 3' FROM EDGE OF SHOULDER OR 1' FROM FACE OF CURB.

FOR CITY OR TOWN ROADS

CHECK WITH MUNICIPALITY FOR REQUIREMENTS

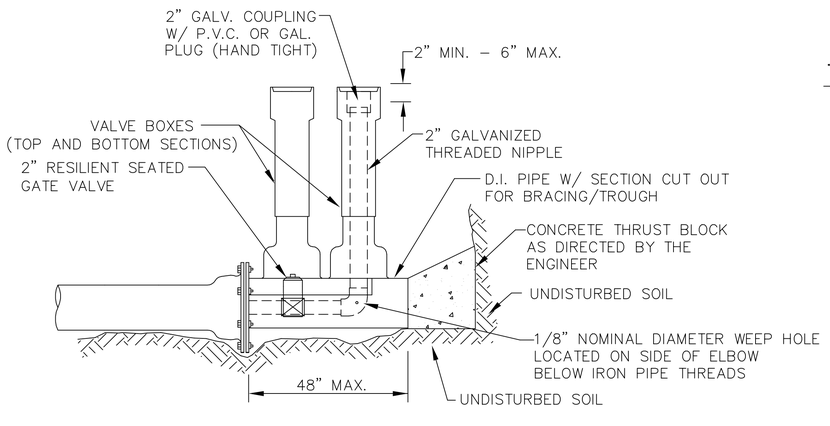

STANDARD 2" BLOW OFF

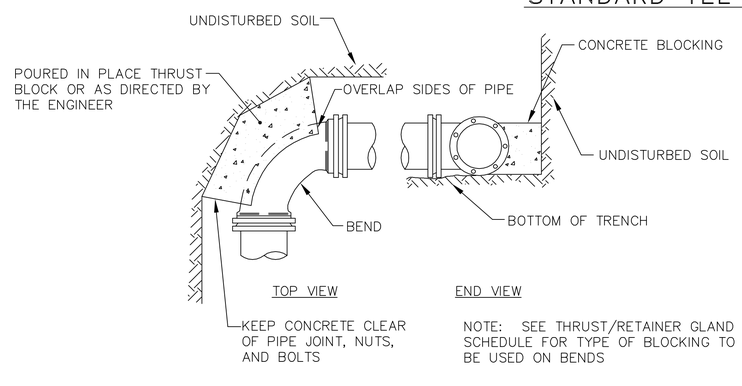

NOTE: SEE THRUST/RETAINER GLAND SCHEDULE FOR TYPE OF BLOCKING TO BE USED ON BENDS

STANDARD BEND BLOCKING

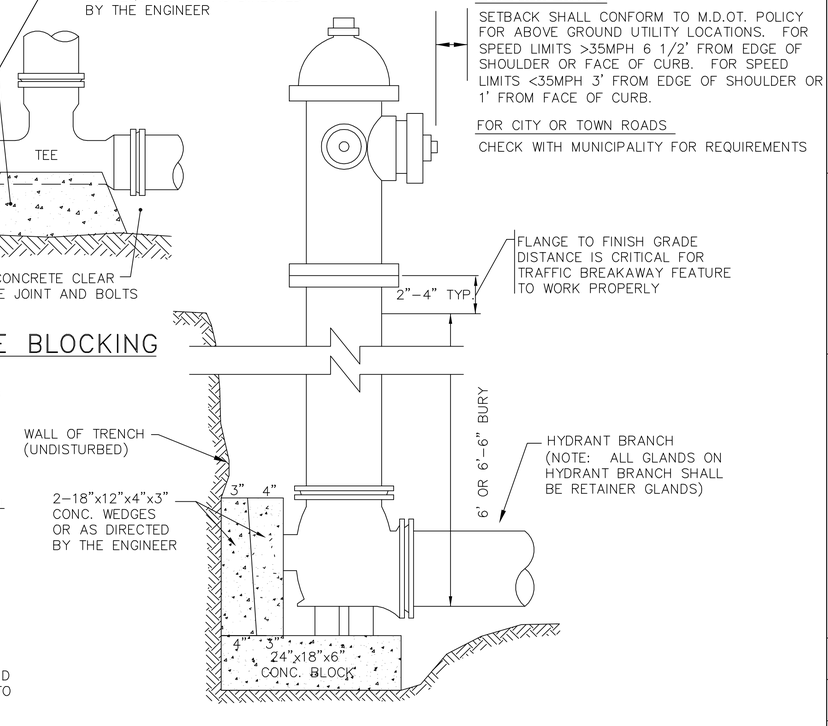

TYPICAL HYDRANT INSTALLATION DETAIL

PROJECT NO.:
CAD FILE:
FIELD BOOK:

SHEET 1 OF 2

STANDARD WATER DETAILS

Portland Water District
ASSET MANAGEMENT & PLANNING DEPT.
225 DOUGLAS STREET P.O. 3553 PORTLAND, MAINE 04104-3553

DESIGN:						
DRAWN:						
CHECK:						
APPROVED:						
DATE:						
SCALE: NTS						
REV. NO.	DATE	DRWN	CHKD	REMARKS		